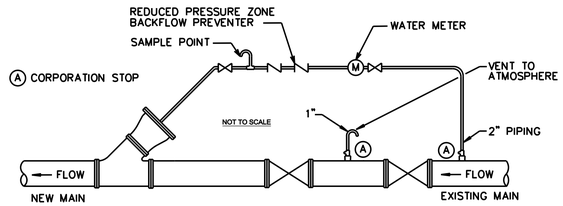

OPTION "A"

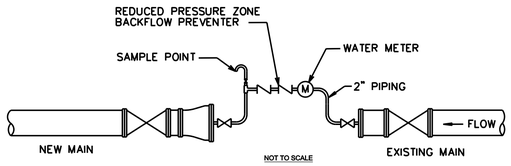

OPTION "B"

EXCEPT AS INDICATED BELOW FOR SHORT LENGTHS, EACH SECTION OF PIPELENE SHALL BE THOROUGHLY CLEANED WITH ONE POLYURETHANE FOAM PIG EACH TIME.

A CITY REPRESENTATIVE SHALL BE PRESENT AT THE TIME OF INSERTION AND EXIT OF THE PIGS. LINES SHALL BE PIGGED AND/OR FLUSHED UNTIL THE WATER RUNS CLEAN AND IS APPROVED BY THE CITY REPRESENTATIVE. THE CITY REPRESENTATIVE SHALL BE GIVEN 48 HOURS MINIMUM NOTICE PRIOR TO PIGGING OR FLUSHING

ON SHORT LENGTHS OF PIPELINE (100' MAX) CLEANING MAY BE ACCOMPLISHED BY FLUSHING WITH WATER AT A MINIMUM VELOCITY OF 2.5 FEET PER SECOND. WATER REQUIRED FOR TESTING AND CLEANING SHALL BE SUPPLIED BY THE CITY AT THE CONTRACTOR'S EXPENSE. WATER SHALL BE FROM A POTABLE SOURCE SATISFACTORY TO THE CITY.

NOTES:

1. REDUCER TO BE NEW MAIN SIZE PLUS 2" LARGER.
2. WYE TO BE PLUGGED AND RESTRAINED AT THE END OF PIGGING.
3. AT THE END OF THE PROJECT, ALL CORPORATIONS TO BE REMOVED AND CORPORATION PLUGS TO BE INSTALLED.
4. SAMPLE POINT TO BE LOCATED AFTER BACKFLOW PREVENTER.
5. ALL MATERIALS, PIPE, AND FITTINGS SHALL CONFORM THE THE CITY OF WINTER GARDEN STANDARDS.
6. INSTALL REDUCER WITH PIG INSIDE. ONLY ONE PIG WILL BE ALLOWED TO BE RUN THROUGH THE MAIN AT A TIME. PIPE EXTENSION CAP MAY BE REQUIRED.
7. PIGGING PROCEDURE TO BE PERFORMED AT LEAST TWICE.

PIPE PIGGING DETAIL

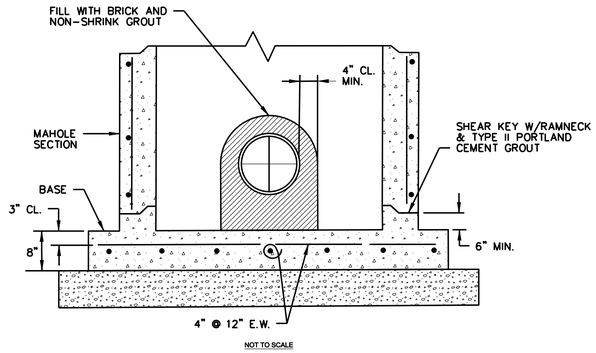

1. TO CONSTRUCT NEW MANHOLE OVER EXISTING SEWER, SLIDE BASE UNDER PIPE AND SET MANHOLE SECTION ON TOP.
2. FOR ADDITIONAL DETAILS NOT SHOWN, SEE "GRAVITY SEWER MANHOLE STANDARD.
3. AT THE END OF THE PROJECT, ALL CORPORATIONS TO BE REMOVED AND CORPORATION PLUGS TO BE INSTALLED. CONTRACTOR SHALL BE RESPONSIBLE FOR SUPPORT OF EXISTING SEWER DURING INSTALLATION OF MANHOLE.

GRAVITY SEWER DOGHOUSE MANHOLE

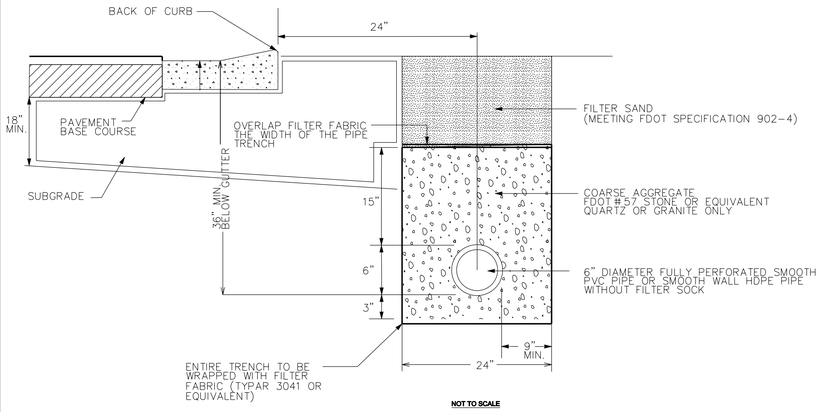

UNDERDRAIN DETAIL

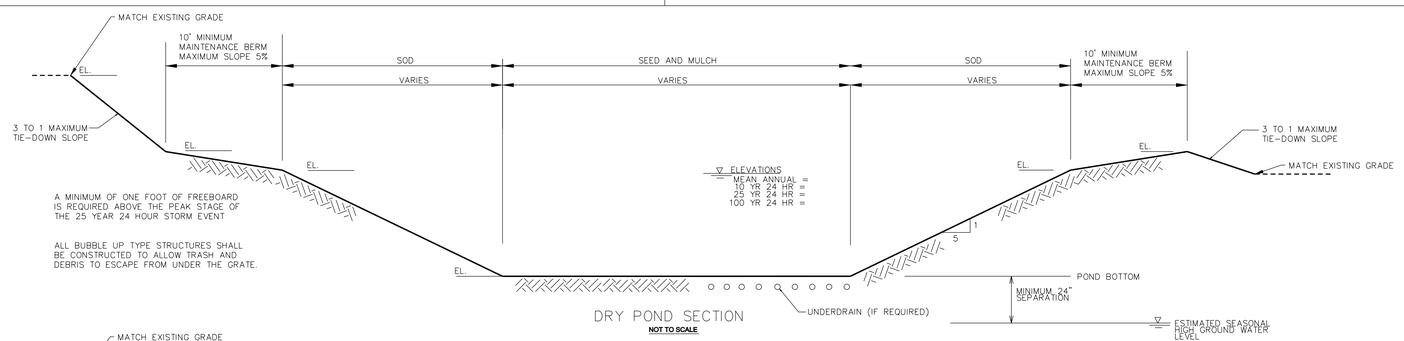

POND SECTIONS

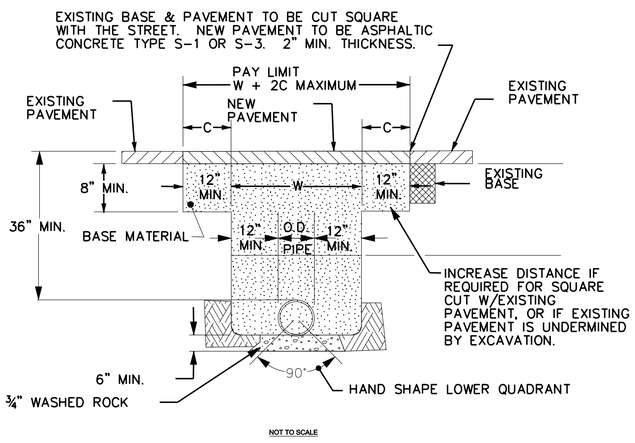

W = O.D. OF PIPE + 12" MIN AT BOTH SIDES OF PIPE.

C = VARIES W/SOIL TYPE (CONTACT ENGINEER OF RECORD FOR DETERMINATION IN FIELD).

ALL BACKFILL COMPACTION SHALL BE 98% OF MAXIMUM DENSITY.

PAVEMENT RESTORATION DETAIL

THE BACKGROUND COLOR SHALL BE RETROREFLECTIVE GREEN AND THE LETTERING AND BORDER SHALL BE RETROREFLECTIVE WHITE.

STREET SIGN BLADE DETAIL

No.	ITEM	DATE
REVISIONS		

City of Winter Garden, Florida
STANDARDS AND SPECIFICATIONS

WINTER GARDEN

STANDARD DETAILS FOR MISCELLANEOUS DETAILS

DATE
APRIL 2014

SHEET
10
10 OF 10